SERBIAN JOURNAL OF ELECTRICAL ENGINEERING
Vol. 10, No. 1, February 2013, 23-30

UDK: 629.4.016:004.932 **DOI: 10.2298/SJEE1301023B**

Vision System for Measuring Wagon Buffers' Lateral Movements

Marko Barjaktarović[1], Miloš Tomić[1],
Slobodan Petričević[1], Pedja Mihailović[1]

Abstract: This paper presents a vision system designed for measuring horizontal and vertical displacements of a railway wagon body. The model comprises a commercial webcam and a cooperative target of an appropriate shape. The lateral buffer movement is determined by calculating target displacement in real time by processing the camera image in a LabVIEW platform using free OpenCV library. Laboratory experiments demonstrate an accuracy which is better than ±0.5 mm within a 50 mm measuring range.

Keywords: Later movements measurement, Railway wagons, UIC 530-2, Image processing, LabVIEW, OpenCV.

1 Introduction

One of the procedures for testing the safety of railway vehicles is based on monitoring the wagon's behavior during its repression through the S curve [1]. The measurement of lateral movements between buffers of the test and the barrier wagons during repression through the S curve is part of the international regulations UIC 530-2 (Wagons-running safety) which is mandatory for the all new carriages [2].

Measuring the dynamic characteristics of railway vehicles is not that common in the professional literature. Testing the wagons in repression through the S curve is performed in only a few centers worldwide. Since the railway wagons are produced in Serbia, the development of measuring tools and techniques for testing the safety is economically justified as well.

The original method for the measurement of the lateral movements is presented in this paper. The method is based on the rigid connection between the buffers and the wagon's body. The measurement of lateral movements between buffers is replaced with the measurement of lateral movements between bodies of the test and the barrier wagons. The measurement system has minimal hardware requirements and is affordable – it comprises affordable PC and high-quality web camera. The camera tracks a target at the test wagon, and

---

[1] School of Electrical Engineering, University of Belgrade, Bulevar kralja Aleksandra 73, 11000 Belgrade, Serbia; E-mails: mbarjaktarovic@etf.rs, tomicmilos@gmail.com, slobodan@etf.bg.ac.rs, pedja@etf.bg.ac.rs

then the images from the camera are processed in real time during wagon repression through the S curve or by means of a specially developed software.

2 The Algorithm for the Measurement of Lateral Movements

The measurement configuration is illustrated in Fig. 1a. Fig. 1b presents a target which is placed at the test wagon. The target is tracked by the web camera.

The horizontal and the vertical displacements of the test wagon are determined by detecting target's centroid in accordance with the same reference point. The reference point is target's center when the test and the barrier wagon are aligned, before their entrance in the S curve. When wagons are aligned, the centroid of the target is not usually in the image center and coordinates for the reference point must be manually entered or automatically detected before the wagon repression through the S curve.

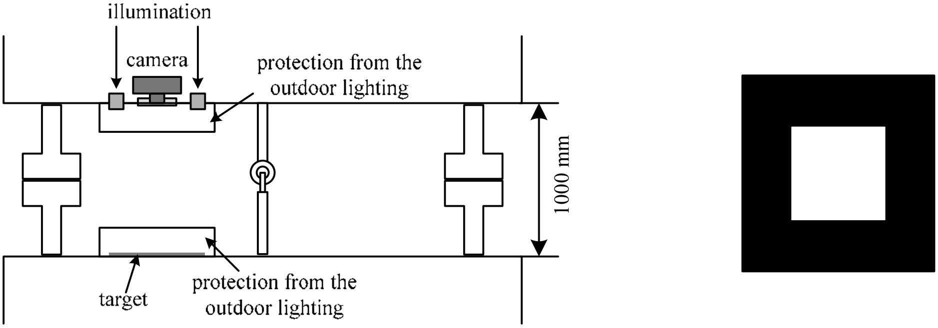

(a) (b)

Fig. 1 – a) *Measurement setup*; b) *Target*.

Finding the target's centroid can be accomplished by means of a standard algorithm for the image segmentation and feature description [3]:

- Taking one color plane from the RGB image. It was found that the highest SNR had the green component which is in accordance with the image acquisition process [4];
- Edge detection and thresholding are performed with the aim of obtaining the boundaries of targets. The algorithm for edge detection is based on the multiplication of wavelet coefficients from the first three scales [5, 6]. The thresholding process results in binary image;
- The application of the morphological operation erosion and dilatation on the binary image reduces the noise and

- In the end, the target's centroid is found to be a centroid of the longest contour. Although the noise can produce several contours in the binary image, the longest contour always belongs to the target which makes the algorithm more robust.

The last step can be replaced with Hough transform [7]. The centroid is than found from intersection of the four lines with the highest score. However, the algorithm based on Hough transform is about 10 times slower than the segmentation algorithm. Additionally, for the stationary target, with the Hough transform, the variation of the target's centroid is twice higher than the variation obtained by segmentation. This is the result of the calculation of center of mass. The Hough transform uses only pixels from the boundary of target. After segmentation, centroid is determined taking into account all pixels inside the boundary of the target. All of the functions mentioned above are part of the open source library OpenCV (**Open** Source **C**omputer **V**ision) [8].

For the implementation in real time, the algorithm is divided and each part is assigned to one of the four while loops which are executed independently and asynchronously. The first loop accomplishes image acquisition and sends the acquired image to the second loop. In the second loop, the target's centroid is found and wagon buffers' lateral movements are calculated. The separation of acquisition and image processing from one loop provides almost twice the higher fps (frame per second) than when they are sequentially executed. Parallel operation of all of the four loops and task distribution among computer's cores is provided by LabVIEW [9].

The third loop sends lateral movements to the central PC by UDP protocol when it's required. The fourth loop is responsible for receiving commands from the central PC by UDP protocol. Only two commands are possible – the activation and deactivation of the continual process of sending both lateral movements.

The semaphores are used for preventing the instantaneous access to the same data by different loops. This mechanism is built in LabVIEW.

3 Description of the Measurement Setup

The experimental setup, illustrated in Fig. 2, is used for checking the algorithm and for testing the software. This setup simulates real conditions during the measurement of lateral movements.

The images are acquired by Logitech QuickCamPro 9000 web camera. This camera is affordable, simple to install and it is compatible with the acquisition software and the operating system. Cameras within this price range have quality optics, two mega pixels, autofocus, auto white balance and auto gain adjustment. Recently, for the similar surveillance and inspection tasks only industrial cameras have been used. Those cameras are 20 or more times more expensive than the selected camera. With the advances in consumer electronics, the characteristic of web cameras have been drastically improved and the QuickCamPro 9000 conforms to all requirements for the monitoring of lateral movements in real time. Moreover, with the aim of adjusting the environment conditions for the proper operation, the camera is mounted in aluminum enclosure, which is in compliance with the IP65 standard.

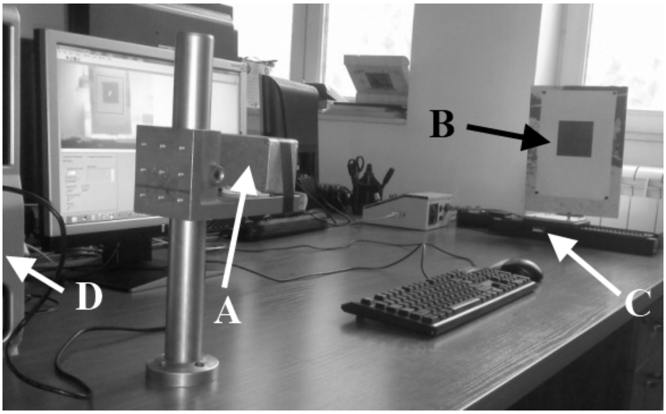

Fig. 2 – *Experimental setup:* A – *camera,* B – *target,*
C – *precise motorized positioner,* G – *computer*.

For the image processing the industrial PC from MSI, model Windbox, has been chosen. Although this PC has low consumption, dual cores provide enough processor power. The price of all components: PC, web camera with enclosure as well as other power supplies is several times less than the price of a smart camera (with all of the components mentioned above) which is usually used for similar tasks. Since the measurement of lateral movements is an integral part of the complex measurement system which necessitates the use of a PC, the use of the smart camera therefore becomes meaningless.

Fig. 3 shows the web camera inside the protective enclosure. The lid of the enclosure has two windows and the image is formed on the camera's CCD through the first window. The second window is used by a photodetector inside the camera for monitoring the intensity of ambient light.

The camera is placed against the target. In the beginning, the camera and the target are aligned. The target is 1 m away from the camera, and it is placed on the precise motorized positioner. The positioner is moved by a step motor with the resolution of 10 µm. The target is a white rectangle on a black background. This configuration provides maximal contrast in the resulting image and increases SNR. For the real measurement, around the target, high power LEDs will be symmetrically installed to provide enough illumination.

Moreover, a small frame will be placed around the camera for preventing the direct daylight from entering the camera and thus saturating the CCD.

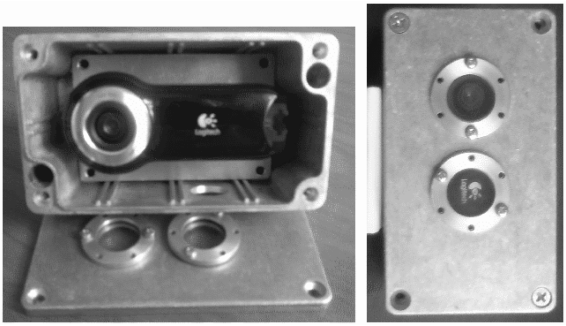

Fig. 3 – *Web camera in* IP65 *enclosure*.

The application for image processing and communication with the central computer by means of a UDP protocol is developed by LabVIEW software package. The LabVIEW makes development fast, especially for parallel programming, which is very simplified and without the need for the details of machine-level code and hardware. Additionally, final stand-alone application does not require the LabVIEW at the target computer. However, if LabVIEW's modules for the image acquisition and image processing (NI Vision Acquisition Software and NI Vision) are used, run time licenses are needed even for the stand-alone application. Those licenses are obligatory for each installation. The price for both licenses exceeds the aggregate cost of all hardware components. In order to reduce expenses per system, free OpenCV library can be used for image acquisition and image processing, as well as for the distribution of the stand-alone application. Functions from OpenCV are incorporated in the LabVIEW through dll (dynamic-link library) mechanism [10].

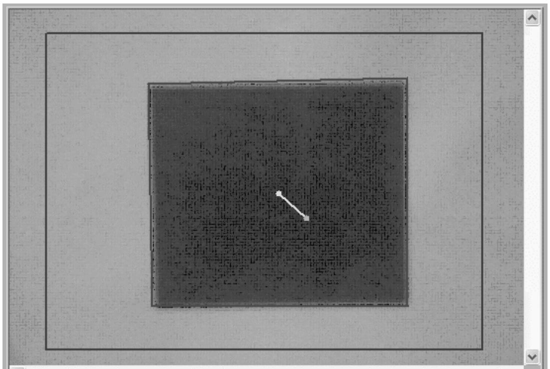

Fig. 4 – *Detected position of the target's centroid.*

Fig. 4 shows the results of the target's centroid. The position of the centroid is marked in yellow, while the target's position is identified with a red rectangle. The blue rectangle defines the image area which is being processed since there is a possibility that other objects can be presented in the camera's field of view, for example a small frame around the target that prevents the influence of the outdoor light. Within the experimental setup, the target and the background are inverted, Fig. 2.

4 Experimental Results

The transfer function of the measurement system is found by means of changing the target position by step motor. In the experiment, the measurement range amounted to 50 mm in both directions with a 1 mm step. The transfer function is shown in Fig. 5. At the each step, the position of the target is obtained after image processing. Sensor calibration is performed by terminal points, at the beginning (0 mm) and at the end (50 mm) of the measurement range. The deviation from the real target position obtained from the positioner is given in Fig.6. It can be noticed that the deviation has periodical components which originate from the rounding of the amount of the pixel value.

Maximal deviation within the overall measurement range is below 1 mm, but deviation is increasing at the end of range. In the next stage, this method will be upgraded with an additional software module for linearization. That module will also eliminate the inaccuracy which is due to optical nonlinearities and which is more explicit in the full application measurement range (±350 mm).

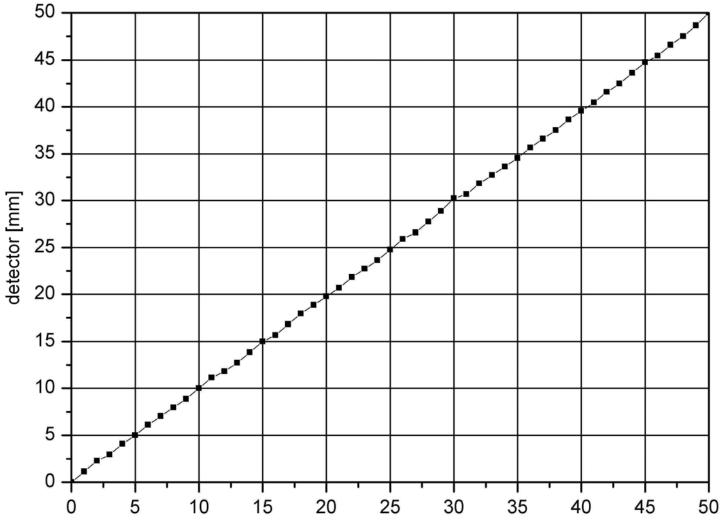

Fig. 5 – *Transfer function for experimental measurement range* [0.50 mm].

When the target is fixed, the centroid variation amounts to ± 1 pixel. This variation results from and is a direct consequence of the noise. It can be assumed that the target was in a new position when the system had detected a change in the centroid position by at least ± 3 pixels which is the same as the movement of the step motor by 0.3 mm.

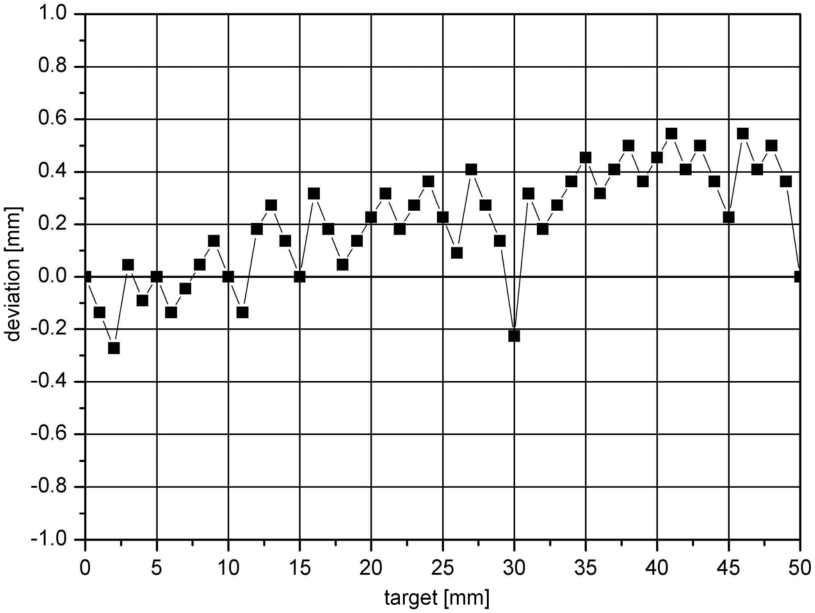

Fig. 6 – *The deviation from real target position.*

5 Conclusion

This paper presents a method for the measurement of lateral movements between buffers of the test and the barrier wagons during repression through the S curve. The experimental results justify the usefulness of the proposed method. The presented measurement system uses a standard, affordable web camera. The aluminum enclosure provides thermo-mechanical protection for the camera. The application for the image acquisition, processing and displaying measurement results is written in LabVIEW software package and free library OpenCV. It is demonstrated that the measurement of wagon buffers' lateral movements has a resolution of 0.3 mm and that the accuracy is better than ±0.5 mm. The experimental results are obtained within a 50 mm measuring range. The expansion to the full measurement range, required by the international regulations UIC 530-2, can be achieved with the development of an additional software module for optical nonlinearity compensation.

6 References

[1] D. Petrović, A. Babić, M. Bižić, M. Đelošević: Merna oprema za dinamička i kvazistatička ispitivanja železničkih vozila, XIV Scientific-expert Conference on Railways, Niš, Serbia, 07 – 08 Oct. 2010, pp. 177 – 181.

[2] UIC 530-2 OR Wagons – running safety, 5th Edition, Union Intenationale de Chemins de Fer, May 2006.

[3] R.C. Gonzales, R.E. Woods: Digital Image Processing, Prentice Hall, Upper Saddle River, NJ, USA, 2008.

[4] J.C. Rush: The Image Processing Handbook, CRC Press, NY, USA, 2011.

[5] M. Barjaktarovic, S. Petričevic: Wavelet based Edge Detection Algorithm for Web Surface Inspection of Coated Board Web, Journal of Instrumentation, Vol. 5, July 2010, P07001.

[6] M. Barjaktarović: Performanse detektora ivica baziranog na množenju wavelet koeficijenata, Telekomunikacije, No. 8, 2011, pp. 54 – 62.

[7] W.K. Pratt: Digital Image Processing, John Wiley and Sons, Hoboken, NJ, USA, 2007.

[8] R. Laganière: OpenCV 2 Computer Vision Application Programming Cookbook, Packt Publishing, Birmingham, UK, 2011.

[9] N. Dorst: Using LabVIEW to Create Multithreaded VIs for Maximum Performance and Reliability, Application Note 114, National Instrument Corporation, Austin, TX, USA, 2000.

[10] Using External Code in LabVIEW, National Instrument Corporation, Austin, TX, USA, 2003.